# 60 AGE Series

## Size (尺寸) 60*60*10mm

### General Specifications (一般規格)

| | | |
|---|---|---|
| Motor | : DC Brushless DC motor. | 馬達 / 直流單向無刷馬達 |
| Frame | : Plastic (94V-0) | 材料 / 框 : 塑膠 (94V-0) |
| Impeller | : Plastic (94V-0) | 材料 / 葉 : 塑膠 (94V-0) |
| Bearing | : Ball;FMB;Sleeve Bearing | 軸承 / 滾珠;液壓;含油軸承 |
| Weight | : 26 g | 重量 / 26 克 |

### Major Characteristic Parameters (主要參數)

| Model 機型 | Bearing System 軸承 | Rated Voltage 電壓 | Operating Range 操作電壓 | Rated Current 電流 | Rated Speed 轉速 | Maximum Air Flow 最大風量 | | Maximum Static Pressure 最大風壓 | | Sound Level 噪音 | P-Q 曲線 |
|---|---|---|---|---|---|---|---|---|---|---|---|
| Part NO. | B / F / S | V | V | A | RPM | m3/min | CFM | mm-H2O | In-H2O | dBA | NO. |
| AGE06010_05L | B F S | 5 | 4.5~5.5 | 0.30 | 3500 | 0.49 | 17.40 | 2.10 | 0.08 | 28.0 | (3) |
| AGE06010_12L | B F S | 12 | 7.0~13.2 | 0.14 | 3500 | 0.49 | 17.40 | 2.10 | 0.08 | 28.0 | (3) |
| AGE06010_24L | B F S | 24 | 14.0~26.4 | 0.05 | 3500 | 0.49 | 17.40 | 2.10 | 0.08 | 28.0 | (3) |
| AGE06010_05M | B F S | 5 | 4.5~5.5 | 0.38 | 4200 | 0.59 | 20.80 | 3.00 | 0.12 | 33.0 | (2) |
| AGE06010_12M | B F S | 12 | 7.0~13.2 | 0.17 | 4200 | 0.59 | 20.80 | 3.00 | 0.12 | 33.0 | (2) |
| AGE06010_24M | B F S | 24 | 14.0~26.4 | 0.08 | 4200 | 0.59 | 20.80 | 3.00 | 0.12 | 33.0 | (2) |
| AGE06010_12H | B F S | 12 | 7.0~13.2 | 0.24 | 4900 | 0.69 | 24.30 | 4.10 | 0.16 | 37.0 | (1) |
| AGE06010_24H | B F S | 24 | 14.0~26.4 | 0.10 | 4900 | 0.69 | 24.30 | 4.10 | 0.16 | 37.0 | (1) |
| | | | | | | | | | | | |
| | | | | | | | | | | | |
| | | | | | | | | | | | |
| | | | | | | | | | | | |
| | | | | | | | | | | | |
| | | | | | | | | | | | |
| | | | | | | | | | | | |
| | | | | | | | | | | | |
| | | | | | | | | | | | |
| | | | | | | | | | | | |

*Function type is optional. (其它功能類型是可加選的)

*All reading are typical values at rated voltage. (所有讀數均為額定電壓下測試的參數)

* Bearing (軸承) - B: Two Ball Bearing (滾珠) F: Fluild Bearing (液壓) S: Sleeve Bearing (合銅)

Specification is subject to change for upgrating without notice

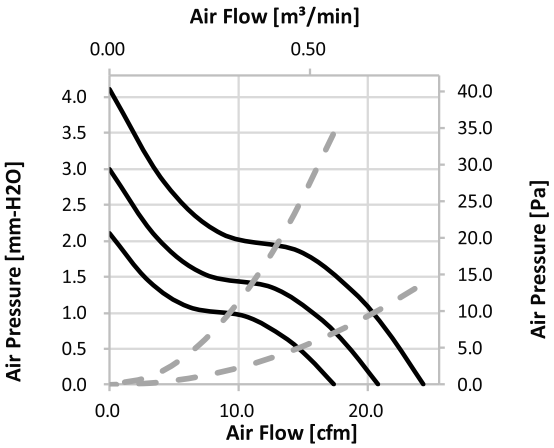


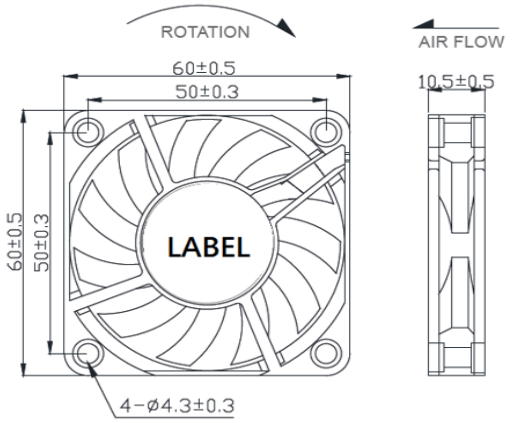


unit:mm

CROWN electronics

www.crownelectronics.com.tw