CROWN
electronics

CROWN ELECTRONICS

DC DISH FAN CATALOGUE

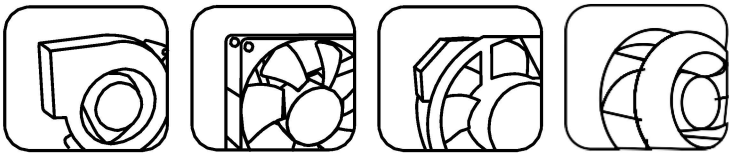

Ver.02

25 AGN Series

Size (尺寸) 25*25*10mm

General Specifications (一般規格)

Motor	: DC Brushless DC motor.	馬達 / 直流單向無刷馬達
Frame	: Plastic (94V-0)	材料 / 框 : 塑膠 (94V-0)
Impeller	: Plastic (94V-0)	材料 / 葉 : 塑膠 (94V-0)
Bearing	: Ball;FMB;Sleeve Bearing	軸承 / 滾珠;液壓;含油軸承
Weight	: 7 g	重量 / 7 克

Major Characteristic Parameters (主要參數)

Model 機型	Bearing System 軸承	Rated Voltage 電壓	Operating Range 操作電壓	Rated Current 電流	Rated Speed 轉速	Maximum Air Flow 最大風量		Maximum Static Pressure 最大風壓		Sound Level 噪音	P-Q 曲線
Part NO.	B / F / S	V	V	A	RPM	m3/min	CFM	mm-H2O	In-H2O	dBA	NO.
AGN02510_05L	B F S	5	4.5~5.5	0.08	7000	0.04	1.36	1.78	0.07	20.0	(3)
AGN02510_12L	B F S	12	7.0~13.2	0.07	7000	0.04	1.36	1.78	0.07	20.0	(3)
AGN02510_05M	B F S	5	4.5~5.5	0.13	10000	0.05	1.91	4.19	0.16	23.5	(2)
AGN02510_12M	B F S	12	7.0~13.2	0.10	10000	0.05	1.91	4.19	0.16	23.5	(2)
AGE02510_05H	B F S	5	4.5~5.5	0.22	13000	0.07	2.48	7.02	0.28	28.0	(1)
AGE02510_12H	B F S	12	7.0~13.2	0.12	13000	0.07	2.48	7.02	0.28	28.0	(1)

*Function type is optional. (其它功能類型是可加選的)

*All reading are typical values at rated voltage. (所有讀數均為額定電壓下測試的參數)

* Bearing (軸承) - B: Two Ball Bearing (滾珠) F: Fluild Bearing (液壓) S: Sleeve Bearing (合銅)

Specification is subject to change for upgrating without notice

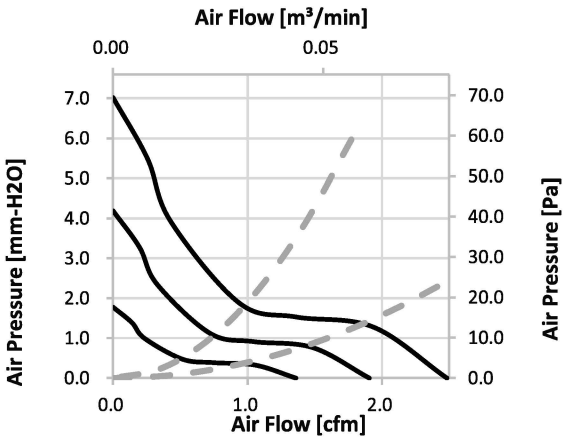

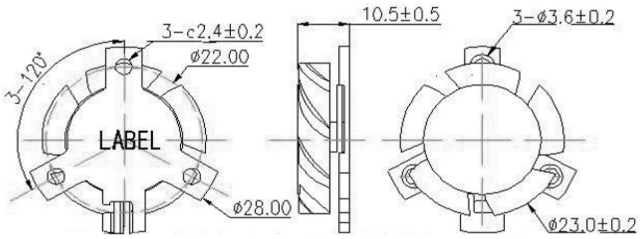

CROWN electronics

www.crownelectronics.com.tw

40 AGN Series

Size (尺寸) 40*40*10

▓General Specifications (一般規格)

Motor	: DC Brushless DC motor.	馬達 / 直流單向無刷馬達
Frame	: Plastic (94V-0)	材料 / 框 : 塑膠 (94V-0)
Impeller	: Plastic (94V-0)	材料 / 葉 : 塑膠 (94V-0)
Bearing	: FMB;Sleeve Bearing	軸承 / 液壓;含油軸承
Weight	: 12 g	重量 / 12 克

■Major Characteristic Parameters (主要參數)

Model 機型	Bearing System 軸承	Rated Voltage 電壓	Operating Range 操作電壓	Rated Current 電流	Rated Speed 轉速	Maximum Air Flow 最大風量		Maximum Static Pressure 最大風壓		Sound Level 噪音	P-Q 曲線
Part NO.	B / F / S	V	V	A	RPM	m3/min	CFM	mm-H2O	In-H2O	dBA	NO.
AGN04010_05M	F S	5	4.5~5.5	0.20	6000	0.23	7.96	2.92	0.11	25.1	(3)
AGN04010_12M	F S	12	7.0~13.2	0.08	6000	0.23	7.96	2.92	0.11	25.1	(3)
AGN04010_05H	F S	5	4.5~5.5	0.25	8000	0.29	10.18	5.10	0.20	33.6	(2)
AGN04010_12H	F S	12	7.0~13.2	0.17	8000	0.29	10.18	5.10	0.20	33.6	(2)
AGN04010_12U	F S	12	7.0~13.2	0.20	10000	0.38	13.45	8.43	0.33	36.3	(1)

*Function type is optional. (其它功能類型是可加選的)

*All reading are typical values at rated voltage. (所有讀數均為額定電壓下測試的參數)

* Bearing (軸承) B: Two Ball Bearing (滾珠) F: Fluild Bearing (液壓) S: Sleeve Bearing (合銅)

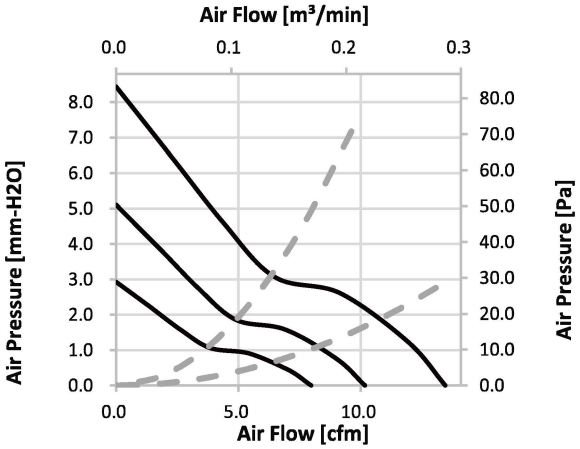

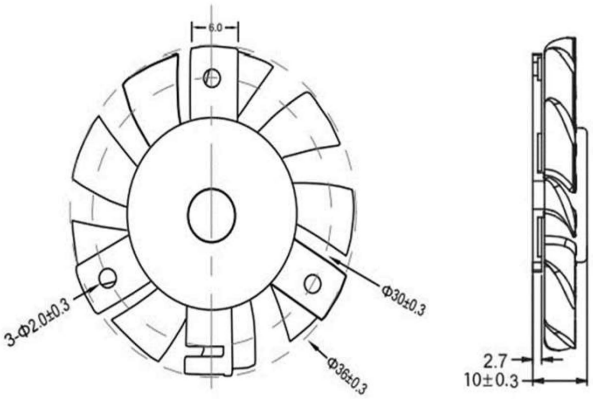

CROWN electronics

www.crownelectronics.com.tw

50 AGN Series

Size (尺寸) 50*50*10

General Specifications (一般規格)

Motor	: DC Brushless DC motor.	馬達 / 直流單向無刷馬達
Frame	: Plastic (94V-0)	材料 / 框 : 塑膠 (94V-0)
Impeller	: Plastic (94V-0)	材料 / 葉 : 塑膠 (94V-0)
Bearing	: FMB;Sleeve Bearing	軸承 / 液壓;含油軸承
Weight	: 15 g	重量 / 15 克

Major Characteristic Parameters (主要參數)

Model 機型	Bearing System 軸承	Rated Voltage 電壓	Operating Range 操作電壓	Rated Current 電流	Rated Speed 轉速	Maximum Air Flow 最大風量		Maximum Static Pressure 最大風壓		Sound Level 噪音	P-Q 曲線
Part NO.	B / F / S	V	V	A	RPM	m3/min	CFM	mm-H2O	In-H2O	dBA	NO.
AGN05010_05J	F S	5	4.5~5.5	0.04	3500	0.21	7.38	1.35	0.05	17.0	(4)
AGN05010_12J	F S	12	7.0~13.2	0.02	3500	0.21	7.38	1.35	0.05	17.0	(4)
AGN05010_05L	F S	5	4.5~5.5	0.08	4500	0.27	9.49	2.24	0.09	24.0	(3)
AGN05010_12L	F S	12	7.0~13.2	0.03	4500	0.27	9.49	2.24	0.09	24.0	(3)
AGN05010_05M	F S	5	4.5~5.5	0.18	5500	0.33	11.59	3.50	0.14	29.0	(2)
AGN05010_12M	F S	12	7.0~13.2	0.08	5500	0.33	11.59	3.50	0.14	29.0	(2)
AGN05010_05H	F S	5	4.5~5.5	0.28	6500	0.40	13.97	4.45	0.18	34.0	(1)
AGN05010_12H	F S	12	7.0~13.2	0.11	6500	0.40	13.97	4.45	0.18	34.0	(1)

*Function type is optional. (其它功能類型是可加選的)

*All reading are typical values at rated voltage. (所有讀數均為額定電壓下測試的參數)

* Bearing (軸承) B: Two Ball Bearing (滾珠) F: Fluid Bearing (液壓) S: Sleeve Bearing (合銅)

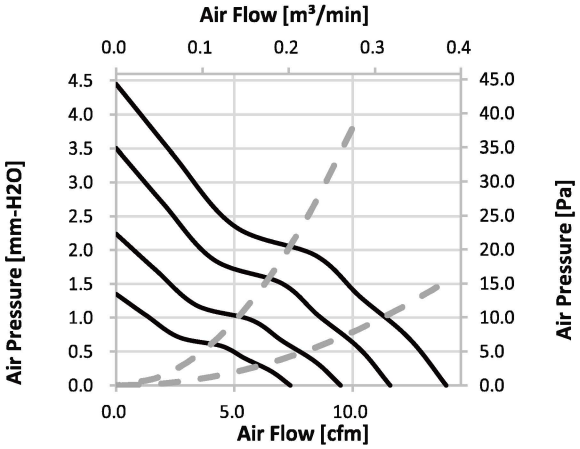

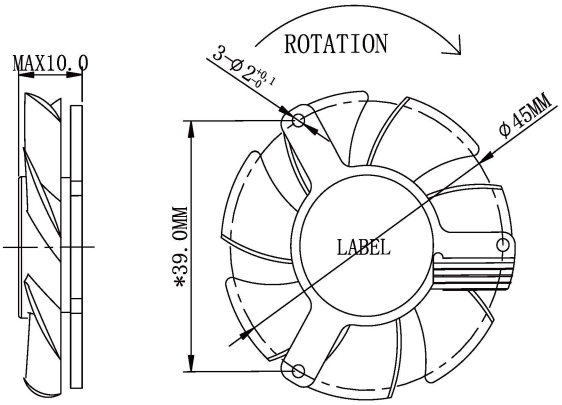

CROWN electronics

www.crownelectronics.com.tw

60 AGN Series

Size (尺寸) 60*60*10

General Specifications (一般規格)

Motor	: DC Brushless DC motor.	馬達 / 直流單向無刷馬達
Frame	: Plastic (94V-0)	材料 / 框 : 塑膠 (94V-0)
Impeller	: Plastic (94V-0)	材料 / 葉 : 塑膠 (94V-0)
Bearing	: FMB;Sleeve Bearing	軸承 / 液壓;含油軸承
Weight	: 18 g	重量 / 18 克

Major Characteristic Parameters (主要參數)

Model 機型	Bearing System 軸承	Rated Voltage 電壓	Operating Range 操作電壓	Rated Current 電流	Rated Speed 轉速	Maximum Air Flow 最大風量		Maximum Static Pressure 最大風壓		Sound Level 噪音	P-Q 曲線
Part NO.	B / F / S	V	V	A	RPM	m3/min	CFM	mm-H2O	In-H2O	dBA	NO.
AGN06010_05L	F S	5	4.5~5.5	0.33	3500	0.54	19.14	2.10	0.08	27.0	(3)
AGN06010_12L	F S	12	7.0~13.2	0.15	3500	0.54	19.14	2.10	0.08	27.0	(3)
AGN06010_24L	F S	24	14.0~26.4	0.06	3500	0.54	19.14	2.10	0.08	27.0	(3)
AGN06010_05M	F S	5	4.5~5.5	0.42	4200	0.65	22.88	3.00	0.12	32.0	(2)
AGN06010_12M	F S	12	7.0~13.2	0.19	4200	0.65	22.88	3.00	0.12	32.0	(2)
AGN06010_24M	F S	24	14.0~26.4	0.09	4200	0.65	22.88	3.00	0.12	32.0	(2)
AGN06010_12H	F S	12	7.0~13.2	0.26	4900	0.76	26.73	4.10	0.16	36.0	(1)
AGN06010_24H	F S	24	14.0~26.4	0.11	4900	0.76	26.73	4.10	0.16	36.0	(1)

*Function type is optional. (其它功能類型是可加選的)

*All reading are typical values at rated voltage. (所有讀數均為額定電壓下測試的參數)

* Bearing (軸承) B: Two Ball Bearing (滾珠) F: Fluild Bearing (液壓) S: Sleeve Bearing (合銅)

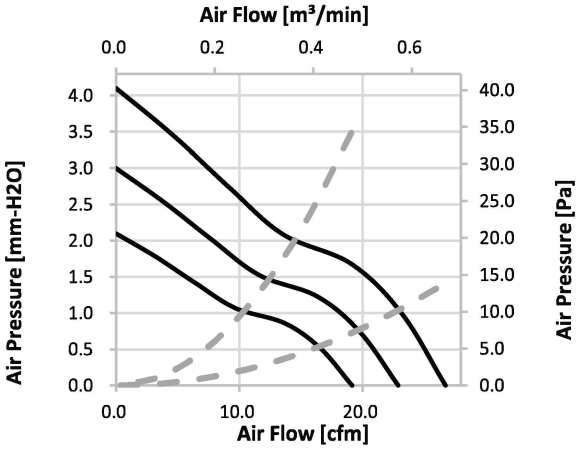

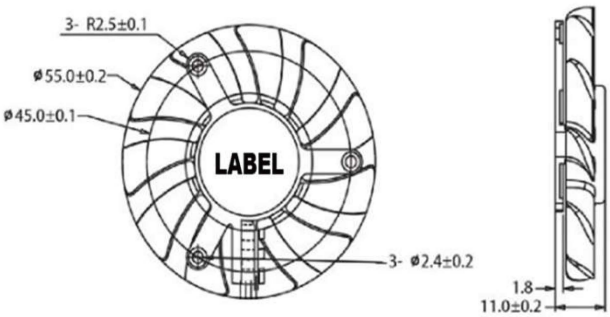

CROWN electronics

www.crownelectronics.com.tw

80 AGN Series

Size (尺寸) 80*80*10

General Specifications (一般規格)

Motor	: DC Brushless DC motor.	馬達 / 直流單向無刷馬達
Frame	: Plastic (94V-0)	材料 / 框 : 塑膠 (94V-0)
Impeller	: Plastic (94V-0)	材料 / 葉 : 塑膠 (94V-0)
Bearing	: FMB;Sleeve Bearing	軸承 / 液壓;含油軸承
Weight	: 26 g	重量 / 26 克

Major Characteristic Parameters (主要參數)

Model 機型	Bearing System 軸承	Rated Voltage 電壓	Operating Range 操作電壓	Rated Current 電流	Rated Speed 轉速	Maximum Air Flow 最大風量		Maximum Static Pressure 最大風壓		Sound Level 噪音	P-Q 曲線
Part NO.	B / F / S	V	V	A	RPM	m3/min	CFM	mm-H2O	In-H2O	dBA	NO.
AGN08010_12L	F S	12	7.0~13.2	0.11	2300	0.77	27.06	1.98	0.08	23.0	(4)
AGN08010_24L	F S	24	14~26.2	0.07	2300	0.77	27.06	1.98	0.08	23.0	(4)
AGN08010_12M	F S	12	7.0~13.2	0.18	2800	0.95	33.55	2.80	0.11	28.0	(3)
AGN08010_24M	F S	24	14~26.2	0.09	2800	0.95	33.55	2.80	0.11	28.0	(3)
AGN08010_12H	F S	12	7.0~13.2	0.25	3300	1.08	38.28	3.64	0.14	31.0	(2)
AGN08010_24H	F S	24	14~26.2	0.17	3800	1.28	45.32	4.70	0.19	34.0	(2)
AGN08010_12U	F S	12	7.0~13.2	0.33	3800	1.28	45.32	4.70	0.19	34.0	(1)
AGN08010_24U	F S	24	14~26.2	0.12	3300	1.08	38.28	3.64	0.14	31.0	(1)

*Function type is optional. (其它功能類型是可加選的)

*All reading are typical values at rated voltage. (所有讀數均為額定電壓下測試的參數)

* Bearing (軸承) B: Two Ball Bearing (滾珠) F: Fluild Bearing (液壓) S: Sleeve Bearing (合銅)

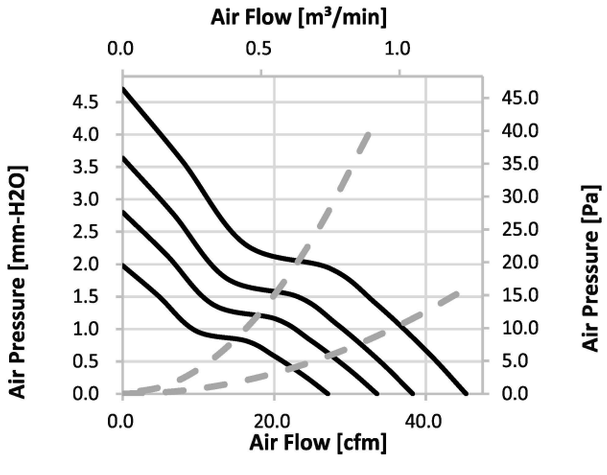

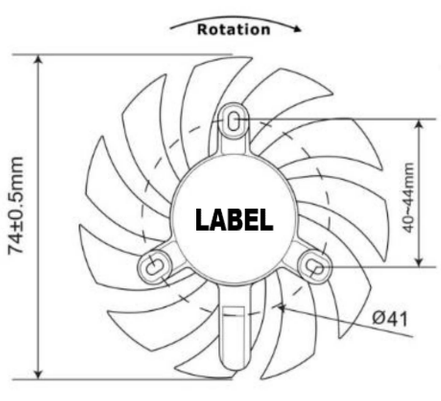

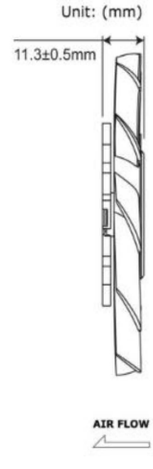

CROWN electronics

www.crownelectronics.com.tw

80 AGN Series

Size (尺寸) 80*80*15

▓General Specifications (一般規格)

Motor	: DC Brushless DC motor.	馬達 / 直流單向無刷馬達
Frame	: Plastic (94V-0)	材料 / 框 : 塑膠 (94V-0)
Impeller	: Plastic (94V-0)	材料 / 葉 : 塑膠 (94V-0)
Bearing	: FMB;Sleeve Bearing	軸承 / 液壓;含油軸承
Weight	: 35 g	重量 / 35 克

■Major Characteristic Parameters (主要參數)

Model 機型	Bearing System 軸承	Rated Voltage 電壓	Operating Range 操作電壓	Rated Current 電流	Rated Speed 轉速	Maximum Air Flow 最大風量		Maximum Static Pressure 最大風壓		Sound Level 噪音	P-Q 曲線
Part NO.	B / F / S	V	V	A	RPM	m3/min	CFM	mm-H2O	In-H2O	dBA	NO.
AGN08015_12J	F S	12	7.0~13.2	0.07	2400	0.72	23.37	2.29	0.09	26.0	(5)
AGN08015_24J	F S	24	14.0~26.4	0.05	2400	0.72	23.37	2.29	0.09	26.0	(5)
AGN08015_12L	F S	12	7.0~13.2	0.10	2700	0.90	29.34	2.79	0.11	29.0	(4)
AGN08015_24L	F S	24	14.0~26.4	0.07	2700	0.90	29.34	2.79	0.11	29.0	(4)
AGN08015_12M	F S	12	7.0~13.2	0.13	3100	1.03	33.50	3.39	0.13	32.0	(3)
AGN08015_24M	F S	24	14.0~26.4	0.10	3100	1.03	33.50	3.39	0.13	32.0	(3)
AGN08015_12H	F S	12	7.0~13.2	0.18	3600	1.23	40.12	4.57	0.18	37.0	(2)
AGN08015_24H	F S	24	14.0~26.4	0.11	3600	1.23	40.12	4.57	0.18	37.0	(2)
AGN08015_12U	F S	12	7.0~13.2	0.36	4500	1.45	47.16	6.60	0.26	41.0	(1)
AGN08015_24U	F S	24	14.0~26.4	0.22	4500	1.45	47.16	6.60	0.26	41.0	(1)

*Function type is optional. (其它功能類型是可加選的)

*All reading are typical values at rated voltage. (所有讀數均為額定電壓下測試的參數)

* Bearing (軸承) B: Two Ball Bearing (滾珠) F: Fluild Bearing (液壓) S: Sleeve Bearing (合銅)

*The P-Q NO. is counted from low CFM.(P-Q曲線區分,請從最小風量(1)往大的數)

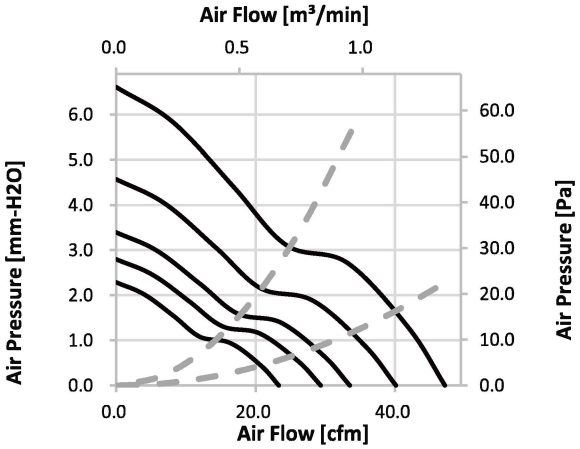

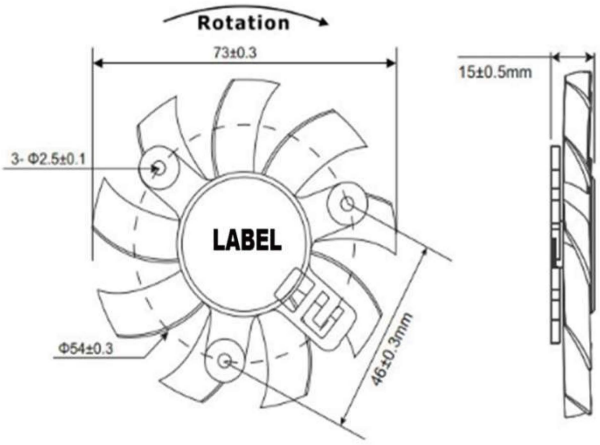

CROWN electronics

www.crownelectronics.com.tw

80 AGN Series

Size (尺寸) 80*80*25

General Specifications (一般規格)

Motor	: DC Brushless DC motor.	馬達 / 直流單向無刷馬達
Frame	: Plastic (94V-0)	材料 / 框 : 塑膠 (94V-0)
Impeller	: Plastic (94V-0)	材料 / 葉 : 塑膠 (94V-0)
Bearing	: Sleeve Bearing	軸承 / 含油軸承
Weight	: 62 g	重量 / 62 克

Major Characteristic Parameters (主要參數)

Model 機型	Bearing System 軸承	Rated Voltage 電壓	Operating Range 操作電壓	Rated Current 電流	Rated Speed 轉速	Maximum Air Flow 最大風量		Maximum Static Pressure 最大風壓		Sound Level 噪音	P-Q 曲線
Part NO.	B / F / S	V	V	A	RPM	m3/min	CFM	mm-H2O	In-H2O	dBA	NO.
AGN08025_12J	S	12	7.0~13.2	0.12	2700	1.03	36.33	3.04	0.12	27.0	(3)
AGN08025_12L	S	12	7.0~13.2	0.14	3000	1.14	40.38	3.77	0.15	30.0	(2)
AGN08025_24L	S	24	14.0~26.4	0.11	3000	1.14	40.38	3.77	0.15	30.0	(2)
AGN08025_12M	S	12	7.0~13.2	0.18	3600	1.37	48.45	5.28	0.21	35.0	(1)
AGN08025_24M	S	24	14.0~26.4	0.15	3600	1.37	48.45	5.28	0.21	35.0	(1)

*Function type is optional. (其它功能類型是可加選的)

*All reading are typical values at rated voltage. (所有讀數均為額定電壓下測試的參數)

* Bearing (軸承) B: Two Ball Bearing (滾珠) F: Fluild Bearing (液壓) S: Sleeve Bearing (合

*The P-Q NO. is counted from low CFM.(P-Q曲線區分,請從最小風量(1)往大的

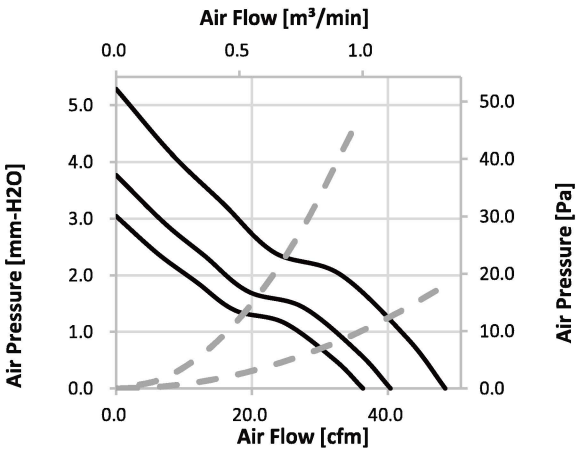

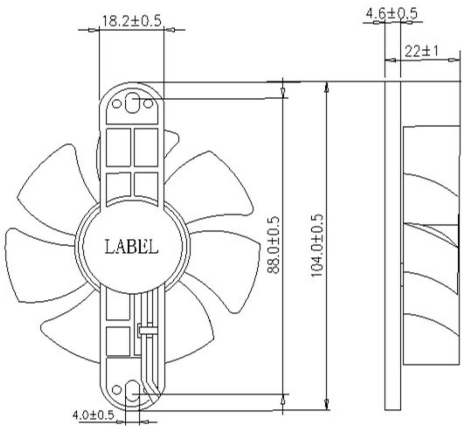

CROWN electronics

www.crownelectronics.com.tw

92 AGN Series

Size (尺寸) 92*92*25

■General Specifications (一般規格)

Motor	: DC Brushless DC motor.	馬達 / 直流單向無刷馬達
Frame	: Plastic (94V-0)	材料 / 框 : 塑膠 (94V-0)
Impeller	: Plastic (94V-0)	材料 / 葉 : 塑膠 (94V-0)
Bearing	: Sleeve Bearing	軸承 / 含油軸承
Weight	: 72 g	重量 / 72 克

■Major Characteristic Parameters (主要參數)

Model 機型	Bearing System 軸承	Rated Voltage 電壓	Operating Range 操作電壓	Rated Current 電流	Rated Speed 轉速	Maximum Air Flow 最大風量		Maximum Static Pressure 最大風壓		Sound Level 噪音	P-Q 曲線
Part NO.	B / F / S	V	V	A	RPM	m3/min	CFM	mm-H2O	In-H2O	dBA	NO.
AGN09225_12J	S	12	7.0~13.2	0.09	2100	1.10	38.85	2.32	0.09	24.0	(5)
AGN09225_12L	S	12	7.0~13.2	0.11	2450	1.33	47.03	2.83	0.11	29.0	(4)
AGN09225_12M	S	12	7.0~13.2	0.14	2850	1.55	54.72	3.83	0.15	33.0	(3)
AGN09225_12H	S	12	7.0~13.2	0.20	3200	1.73	61.20	4.53	0.18	37.0	(2)
AGN09225_24H	S	24	14.0~26.4	0.15	3200	1.73	61.20	4.53	0.18	37.0	(2)
AGN09225_12U	S	12	7.0~13.2	0.30	3800	2.06	72.68	6.39	0.25	44.0	(1)
AGN09225_24U	S	24	14.0~26.4	0.20	3800	2.06	72.68	6.39	0.25	44.0	(1)

*Function type is optional. (其它功能類型是可加選的)

*All reading are typical values at rated voltage. (所有讀數均為額定電壓下測試的參數)

* Bearing (軸承) B: Two Ball Bearing (滾珠) F: Fluild Bearing (液壓) S: Sleeve Bearing (合銅)

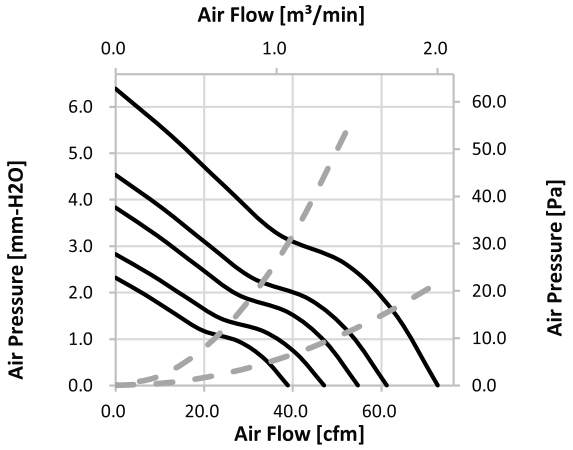

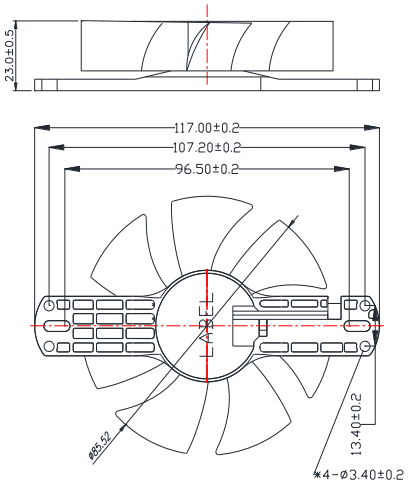

CROWN electronics

www.crownelectronics.com.tw

120 AGN Series

Size (尺寸) 120*120*25

General Specifications (一般規格)

Motor	: DC Brushless DC motor.	馬達 / 直流單向無刷馬達
Frame	: Plastic (94V-0)	材料 / 框 : 塑膠 (94V-0)
Impeller	: Plastic (94V-0)	材料 / 葉 : 塑膠 (94V-0)
Bearing	: Sleeve Bearing	軸承 / 含油軸承
Weight	: 126 g	重量 / 126 克

Major Characteristic Parameters (主要參數)

Model 機型	Bearing System 軸承	Rated Voltage 電壓	Operating Range 操作電壓	Rated Current 電流	Rated Speed 轉速	Maximum Air Flow 最大風量		Maximum Static Pressure 最大風壓		Sound Level 噪音	P-Q 曲線
Part NO.	B / F / S	V	V	A	RPM	m3/min	CFM	mm-H2O	In-H2O	dBA	NO.
AGN12025_12J	S	12	7.0~13.2	0.09	1200	1.21	42.63	2.18	0.09	18.0	(5)
AGN12025_24J	S	24	14.0~26.4	0.06	1200	1.21	42.63	2.18	0.09	18.0	(5)
AGN12025_12L	S	12	7.0~13.2	0.19	1900	2.07	73.08	3.53	0.14	28.0	(4)
AGN12025_24L	S	24	14.0~26.4	0.11	1900	2.07	73.08	3.53	0.14	28.0	(4)
AGN12025_12M	S	12	7.0~13.2	0.21	2200	2.33	82.11	4.67	0.18	30.0	(3)
AGN12025_24M	S	24	14.0~26.4	0.19	2200	2.33	82.11	4.67	0.18	30.0	(3)
AGN12025_12H	S	12	7.0~13.2	0.29	2500	2.54	89.78	5.19	0.20	35.0	(2)
AGN12025_24H	S	24	14.0~26.4	0.21	2500	2.54	89.78	5.19	0.20	35.0	(2)
AGN12025_12U	S	12	14.0~26.4	0.34	2800	2.99	105.58	6.51	0.26	37.5	(1)
AGN12025_24U	S	24	14.0~26.4	0.26	2800	2.99	105.58	6.51	0.26	37.5	(1)

*Function type is optional. (其它功能類型是可加選的)

*All reading are typical values at rated voltage. (所有讀數均為額定電壓下測試的參數)

* Bearing (軸承) B: Two Ball Bearing (滾珠) F: Fluild Bearing (液壓) S: Sleeve Bearing (合銅)

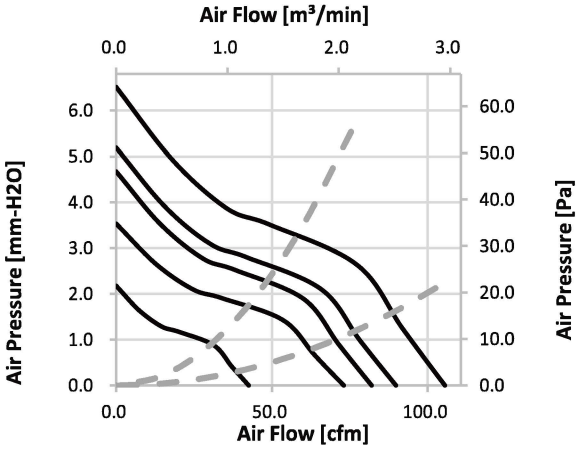

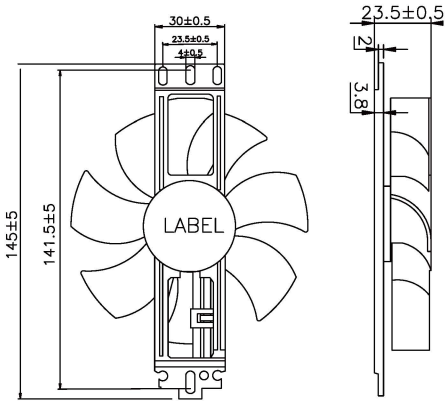

CROWN electronics

www.crownelectronics.com.tw